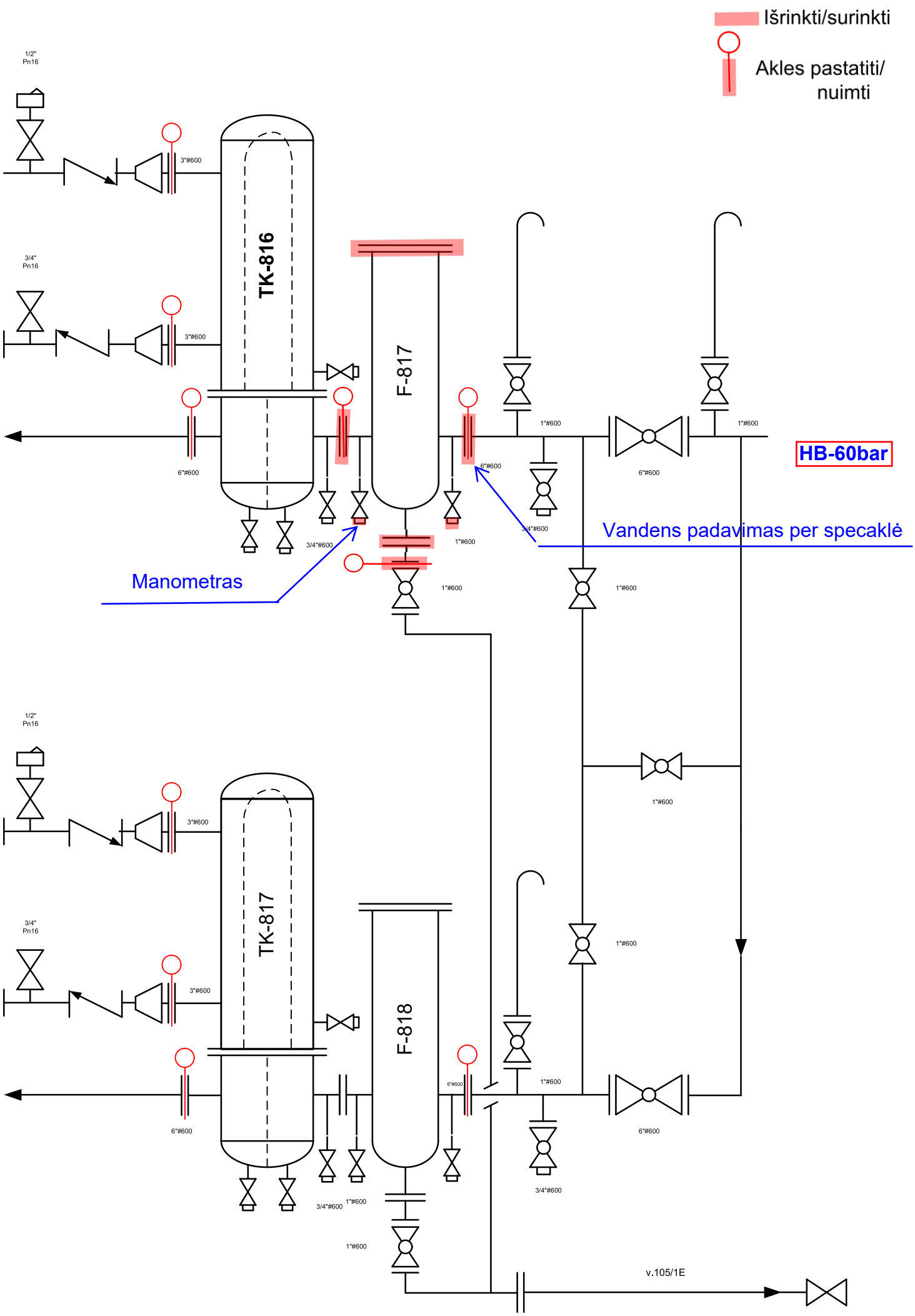
Išrinkti/surinkti
Akles pastatiti/ nuimti
1/2" Pn16
3/4" Pn16
3"#600
TK-816
F-817
6"#600
3/4"#600
1"#600
HB-60bar
Vandens padavimas per specaklė
Manometras
TK-817
F-818
v.105/1E